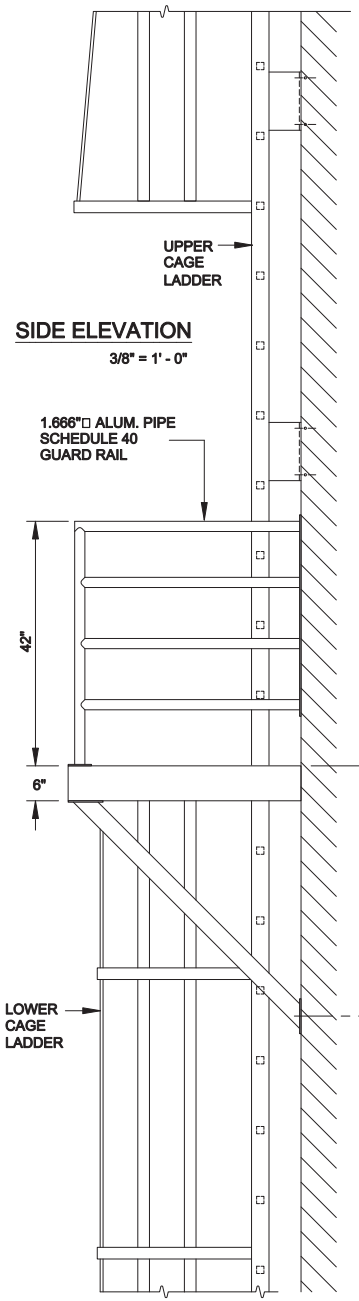

SIDE ELEVATION
3/8" = 1' - 0"

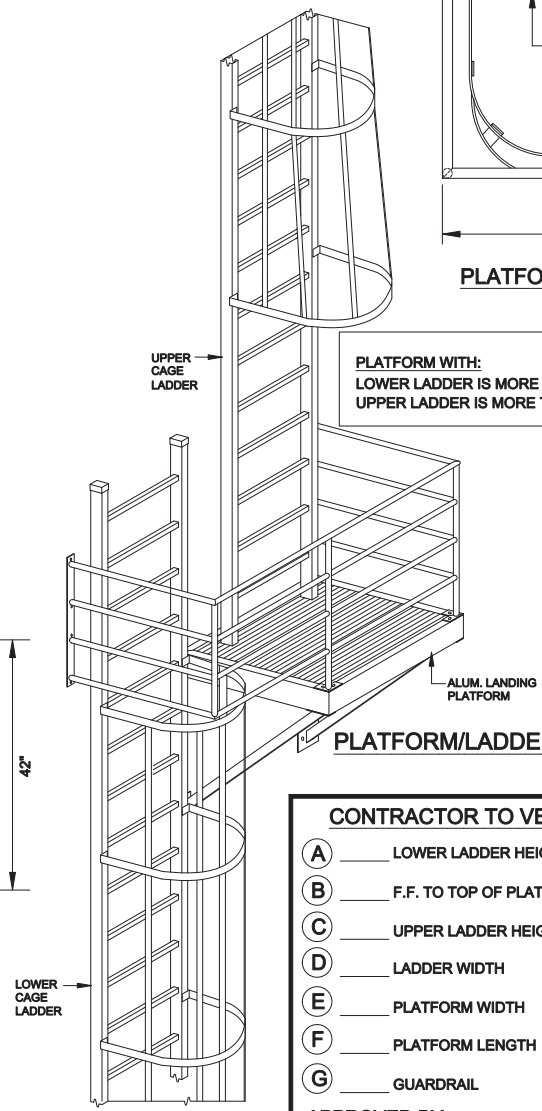

PLATFORM/LADDER
N.T.S.

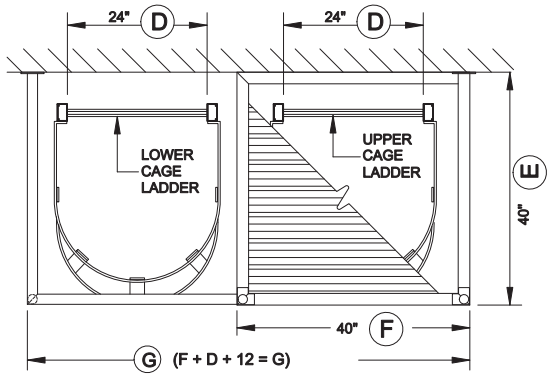

PLATFORM PLAN
3/8" = 1' - 0"

PLATFORM WITH:
LOWER LADDER IS MORE THAN 20' - 0" HEIGHT
UPPER LADDER IS MORE THAN 20' - 0" HEIGHT

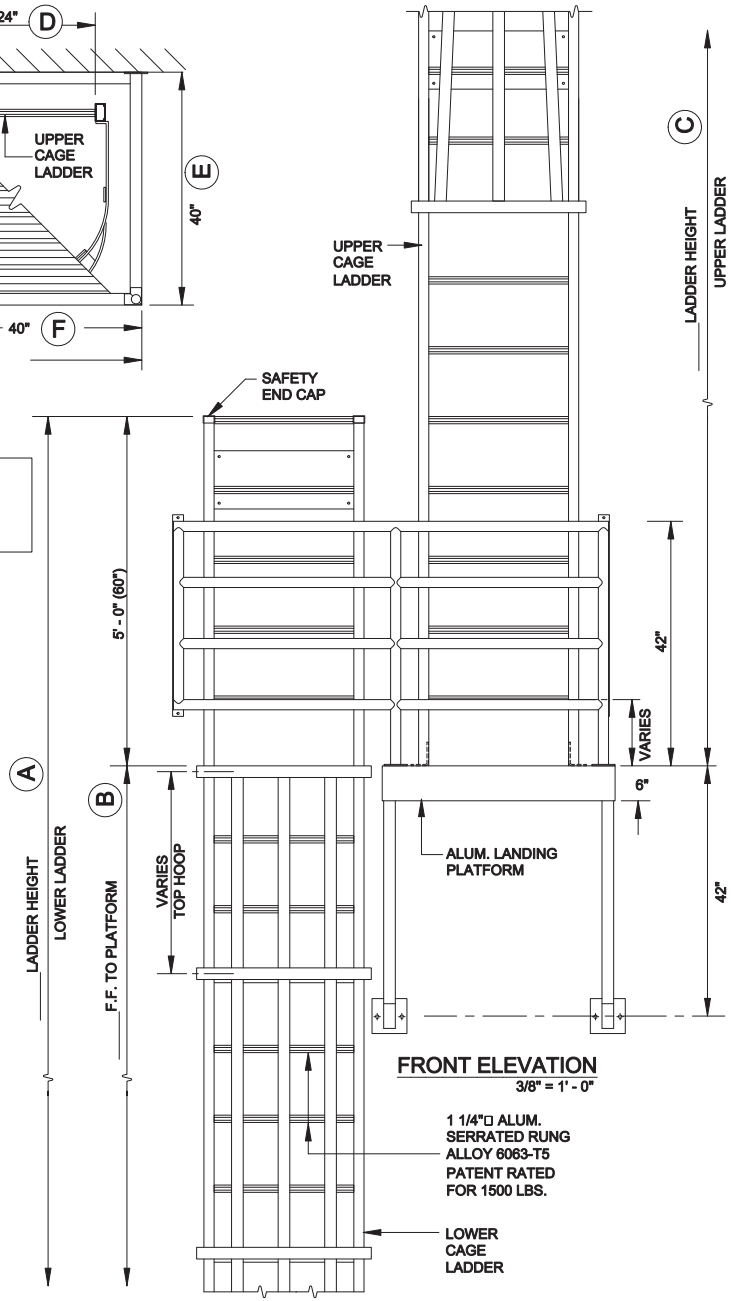

FRONT ELEVATION
3/8" = 1' - 0"

CONTRACTOR TO VERIFY:

A	_____	LOWER LADDER HEIGHT
B	_____	F.F. TO TOP OF PLATFORM
C	_____	UPPER LADDER HEIGHT
D	_____	LADDER WIDTH
E	_____	PLATFORM WIDTH
F	_____	PLATFORM LENGTH
G	_____	GUARDRAIL

APPROVED BY: _____

DATE _____

O'KEEFFE'S, INC.
325 NEWHALL STREET
SAN FRANCISCO, CA 94124
TEL. (415)824-4900
FAX. (415)824-5900

___QUANTITY

☐ CLEAR ANODIZED ☐ MILL FINISH
☐ BRONZE ANODIZED ☐ POWDER COATING
☐ BLACK ANODIZED ☐ POWDER COATING

SALE NO.

DATE :